## FEMALE END VIEW

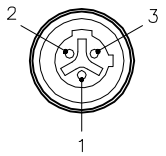


1 = GREEN/YELLOW
2 = BLACK
3 = WHITE

## SPECIFICATIONS

| | |
|---|---|
| CONTACT CARRIER MATERIAL/COLOR | NYLON/BLACK |
| CONTACT MATERIAL/PLATING | BRASS/GOLD |
| HOUSING MATERIAL/FINISH | STAINLESS STEEL/PASSIVATED |
| RATED CURRENT [A] | 4.0 A |
| RATED VOLTAGE [V] | 250 V |
| O–RING MATERIALS | NITRILE |
| CONDUCTOR INSULATION MATERIAL | PVC |
| NUMBER OF CONDUCTORS [AWG] | 3x18 AWG |
| TEMPERATURE RATING | –40°C to +105°C (–40°F to +221°F) |
| PROTECTION CLASS | NEMA 1,3,4,6P AND IEC IP67, IP68, IP69K |

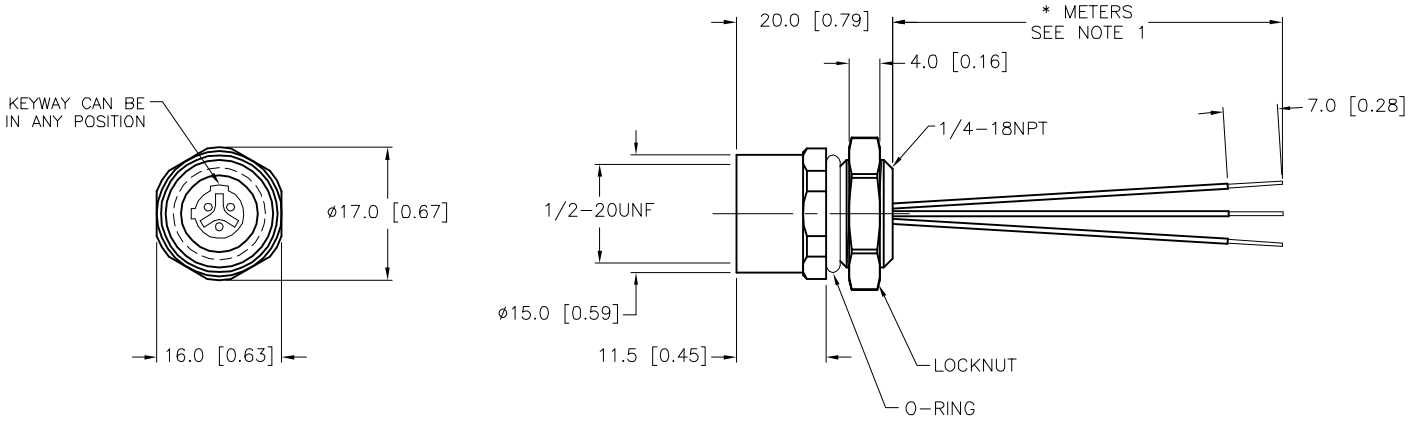


**SOURCE DRAWING - FOR REFERENCE ONLY**

NOTES:

1. "*" INDICATES LEAD LENGTH IN METERS. CONTACT TURCK TO ORDER SPECIFIC LENGTHS.

2. "/S662" DESIGNATES 18 AWG CONDUCTORS AND CUSTOM WIRING.

| REV | DESCRIPTION | BY | DATE | ECO NO. |
|---|---|---|---|---|
| C | UPDATED SPECS | AS | 03/25/26 | 81761 |

RELATED DOCUMENTS
1.
2.
3.
4.

3RD ANGLE PROJECTION

THIS DRAWING IS CONFIDENTIAL AND THE PROPERTY OF TURCK INC. USE OF THIS DOCUMENT WITHOUT WRITTEN PERMISSION IS PROHIBITED.


TURCK
3000 CAMPUS DRIVE
MINNEAPOLIS, MN 55441
1–800–544–7769
(763) 553–7300
(763) 553–0708 fax
www.turck.us


MATERIAL

FINISH

ALL DIMENSIONS DISPLAYED ON THIS DRAWING ARE FOR REFERENCE ONLY

CONTACT TURCK FOR MORE INFORMATION

DRFT CK | DATE 07/27/11
APVD | SCALE 1=1.0

UNIT OF MEASUREMENT
**MILLIMETER [ INCH ]**

DO NOT SCALE THIS DRAWING

DESCRIPTION
FKBV 3–*/18.25/S662

IDENTIFICATION NO.

REV C

FILE: 777027942

SHEET 1 OF 1